© Illumino Ignis Ltd. 2026. All Rights Reserved

Illumino Ignis Ltd™
LIGHTING & FIRE DESIGN, SUPPLY & SUPPORT

4B-I Isolator Base

Addressable - Devices

Part No. 517.050.043

www.illuminoignis.co.uk

Product Details

The new 4B-I 4" Isolator base is designed to snap-fit to the ceiling tile adaptor or it can screw fix to a ceiling in the traditional manner. The 4B-I 4" base is designed specifically for use with the FC460 series detectors and provides protection against short circuit faults on the FireClass digital addressable loop.



Key Features

- For use with the FC460 series detectors
- Compact rigid design that improves the appearance and is easy to install
- Drives a remote indicator
- Up to 250 x 4B-I 4" isolators can be connected on each loop
- Snap fit to the time saver ceiling tile adaptor
- Detector locking pin included
- Detector park position for service and commissioning,
- Break-outs for surface mount

Technical Specifications

Dimensions	Height: 25mm Diameter overall: 109mm
Material	Base: Flame Retardant PC-ABS Base Contacts: annealed spring steel Base screws: stainless steel
Weight	Base: 0.064 kg
Operating Temperature	-25 °C to +70 °C (+90 °C for short periods)
Storage Temperature	-40 °C to +80 °C
Relative Humidity	95 % non-condensing

0203 00 44 855
sales@illuminoignis.co.uk
illuminoignis.co.uk

Illumino Ignis Ltd, Ignis House,
Imperial Way, Eagle Business Park,
Yaxley, Cambridgeshire, PE7 3GP

© Illumino Ignis Ltd. 2026. All Rights Reserved

Illumino Ignis Ltd™
LIGHTING & FIRE DESIGN, SUPPLY & SUPPORT

4B-I Isolator Base

Addressable - Devices

Part No. 517.050.043

Variants

There are a number of variants in the series, to suit varying installation requirements and detector design. All the variants are similar, in terms of construction and dimensions.

4B Base Variants

4B	Base variant	Use when the isolator base is not required.
4B-I	Isolator base. If a loop short circuit is detected on one side of the base, loop continuity is automatically broken to maintain a functioning section of loop on the other side of the base. The base itself remains functioning. Once the short circuit is no longer detected, loop contiguity is automatically restored.	Use with FC460 series detectors.

Wiring

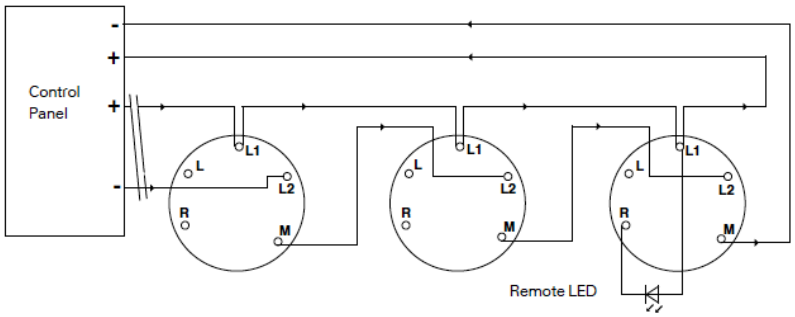

Typical implementation wiring diagram – 4B-I Isolator Base

0203 00 44 855
sales@illuminoignis.co.uk
illuminoignis.co.uk

Illumino Ignis Ltd, Ignis House,
Imperial Way, Eagle Business Park,
Yaxley, Cambridgeshire, PE7 3GP